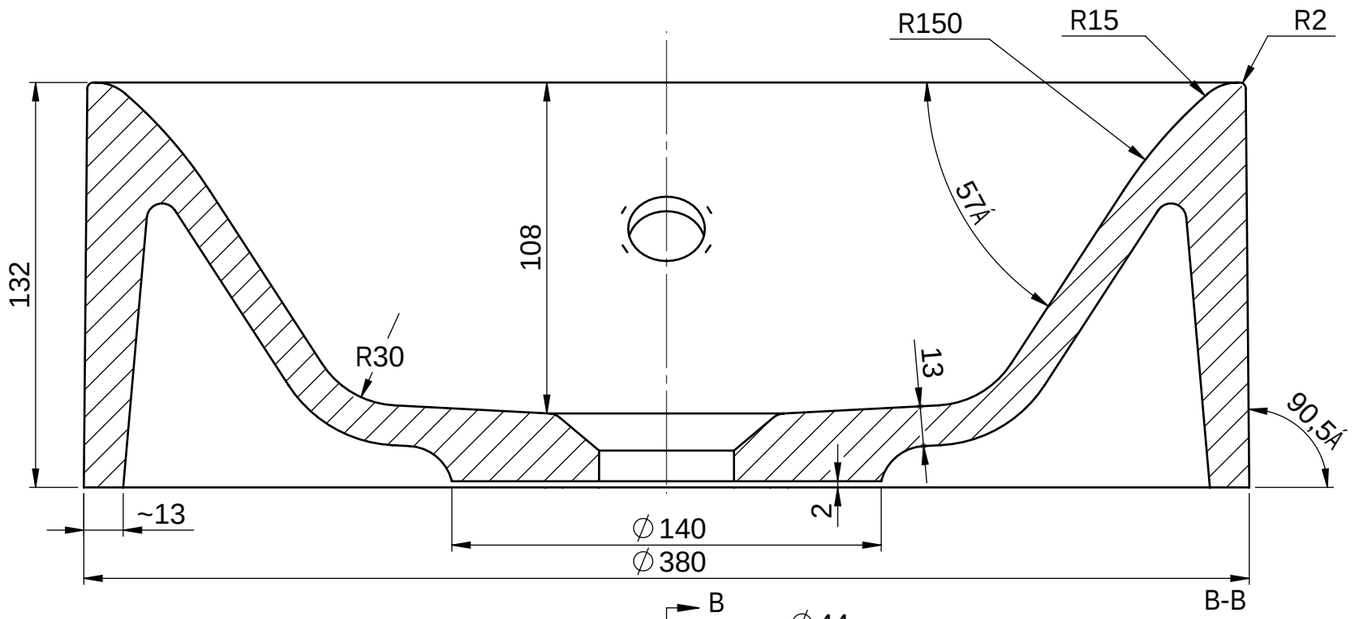
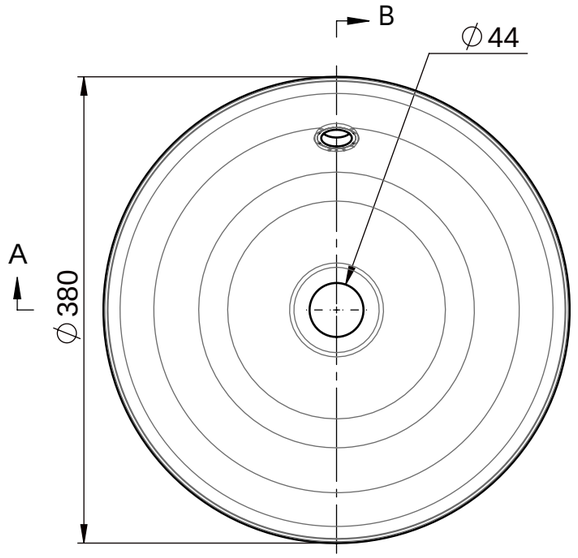
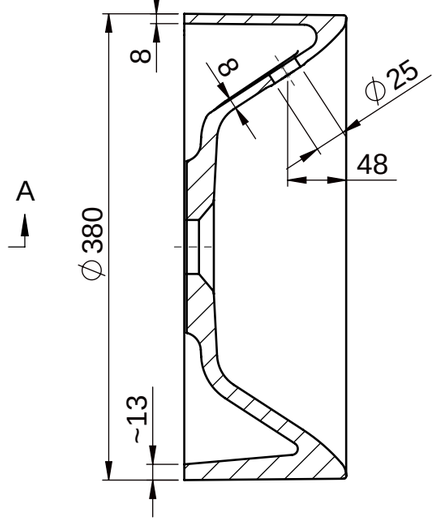
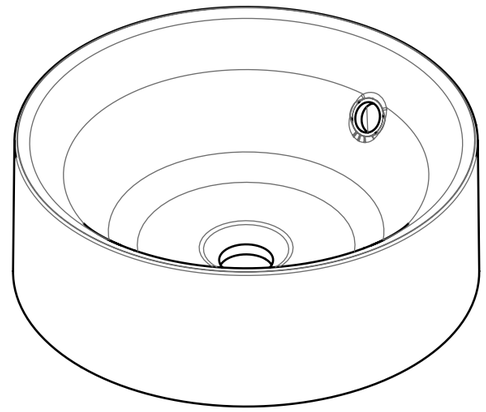
Rev	Design Change Note	Author	Date
002	Dimension added	RB	2015-06-26
003	Approved by client	RB	2015-06-30
004	Changed height of side wall from 130 to 132	RB	2015-09-15

A-A (1 : 2)

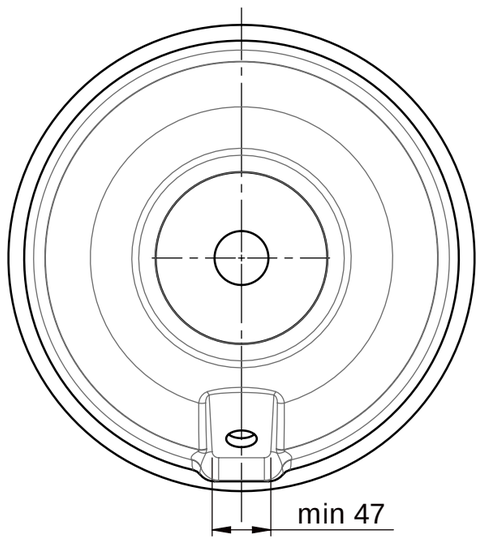








Bottom view/
Widok z doģu



This document must not be copied without our written permission, and the contents thereof must not be imparted to a third party nor be used for any unauthorized purpose. Contravention will be prosecuted.

Tolerance total	length	+3/0 mm
	width	+2/0 mm
	height	+2/-2 mm
Tol. height side walls	Ж‰ ҮҮ	+1/-1 mm
	Б‰ ҮҮ	+2/-2 mm
Tolerance holes location		+2/-2 mm
Tolerance holes diameter		+1/-1 mm
Tolerance plane bending		+1,5/-1,5 mm

Drawn by: Rafal B	Created Date: 2015-06-01	Checked by: Zbigniew P
Project status: Approved	Client: LEROY	

MARmite

Art. Name: CAPSULE ROUND 380
Art. No: 6073270410xx
Mould No: F7327041
Customer ID: 3127

Material volume[mm³]	Overflow	Taphole	Main dimensions L x W / H [mm]	Drain
4300611	Yes	0	380 x 380 / 132	Regular

Surface area[mm²]	Sheet Size	Scale	Current revision
553432	A3	1:5	004