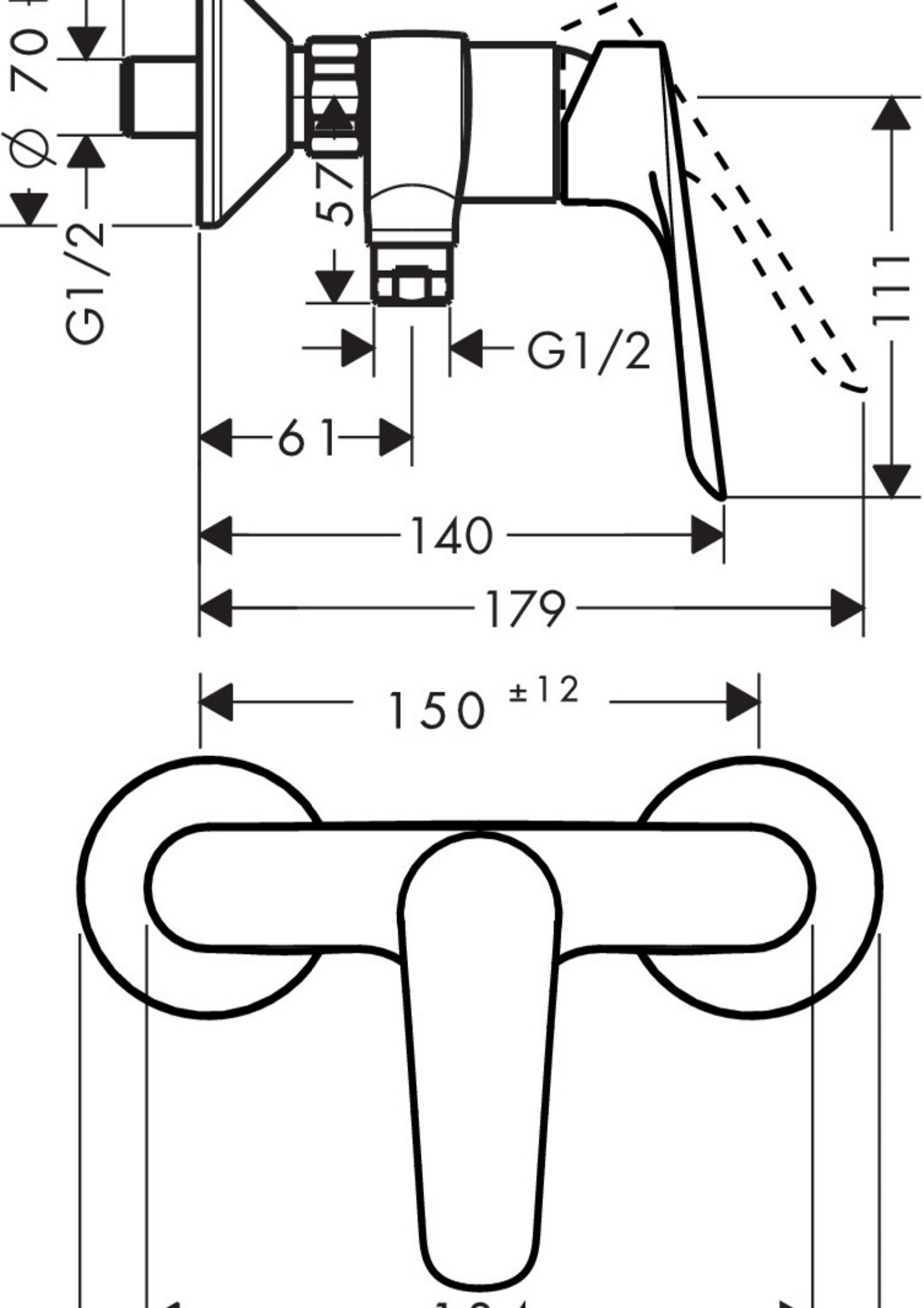
Ø 70
G1/2
57
G1/2
111
61
140
179
150 ±12