Rev	Design Change Note	Author	Date
A	Internal validation	RB	2018-06-12
001	First issue - proposal	RB	2018-06-15
002	Approved by client	RB	2018-06-25

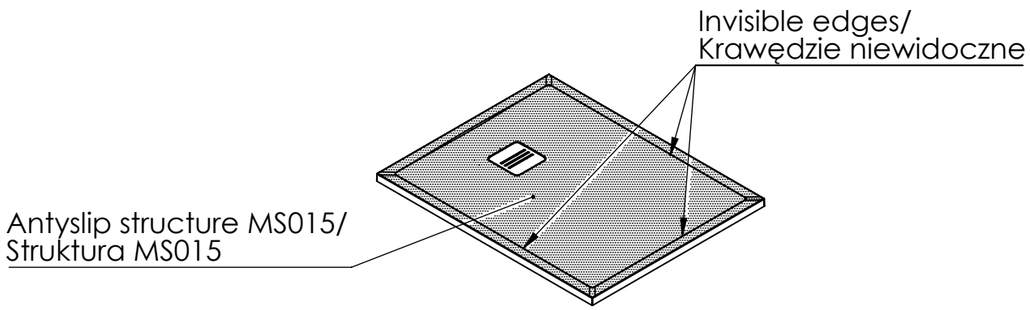

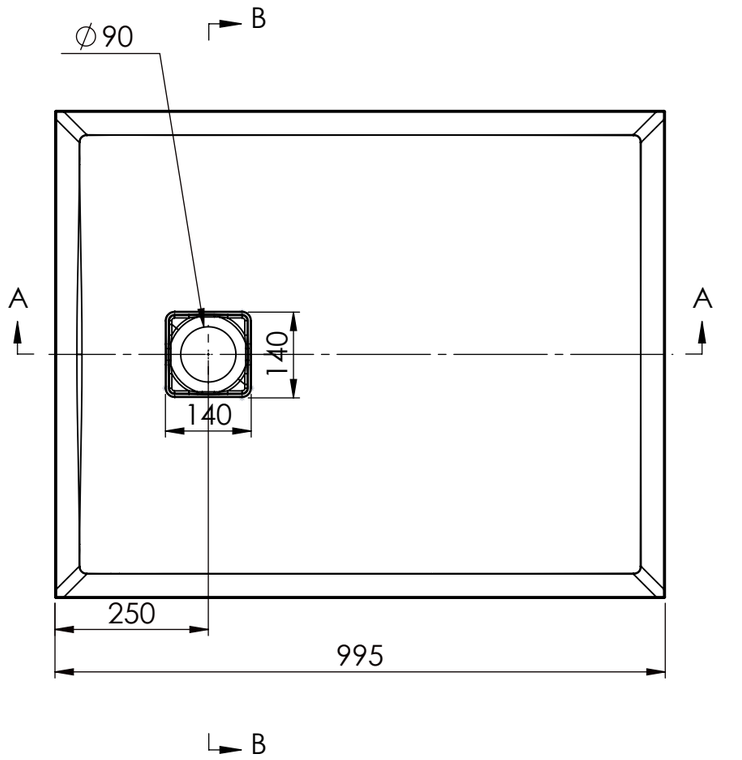

A-A

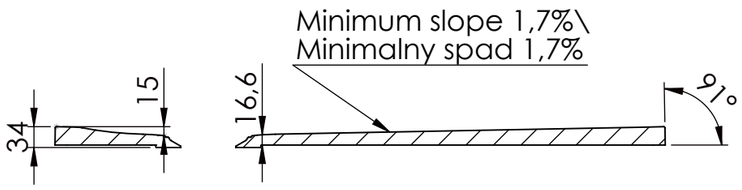

B-B

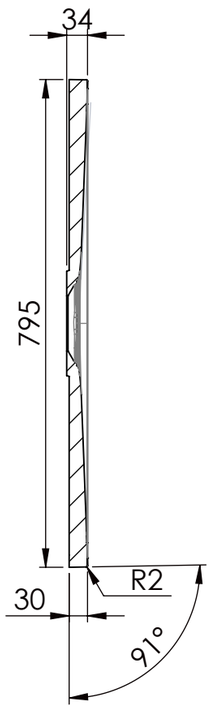

Bottom view - feet position/
Widok z dołu - rozstaw stópek

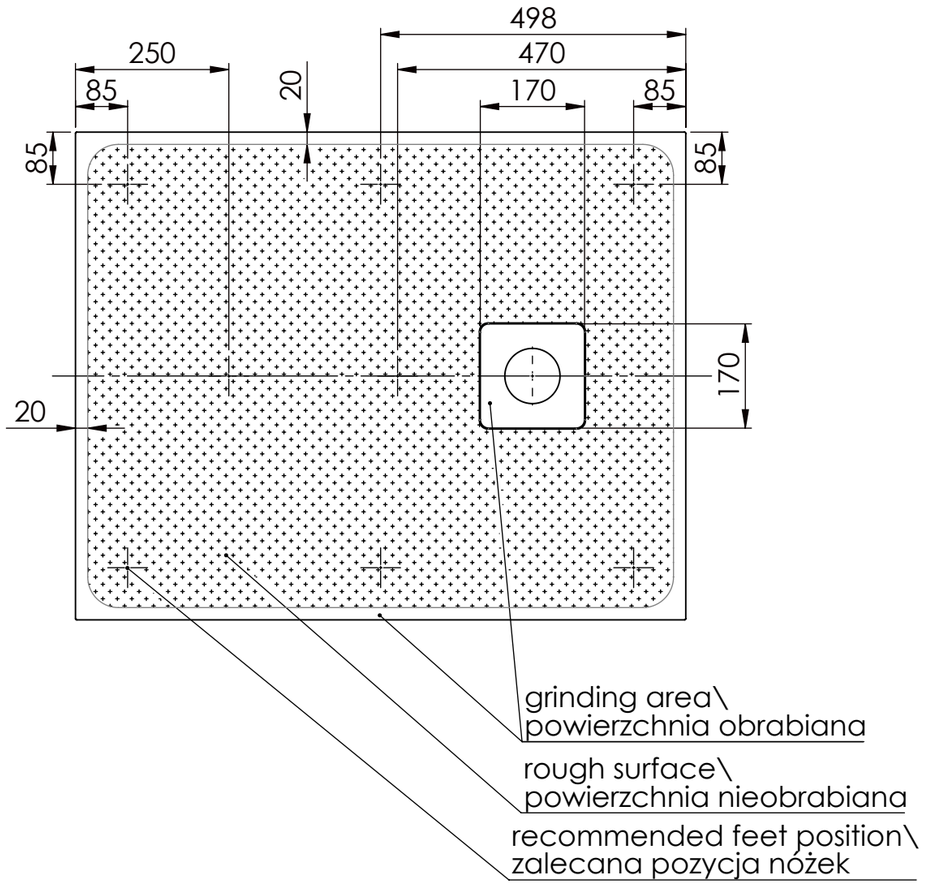

Notes/Uwagi:

1. Steel plate - see drawing 103300000055/Metalowa przykrywka - patrz rysunek 103300000055

Tolerance length/width	+5/0 mm
Tolerance height	+2/-2 mm
Tolerance plane bending ≤1200 mm	+2/-2 mm
Tolerance plane bending ≥1200 mm	+3/-3 mm
Tolerance thickness	+2/-2 mm
Tolerance grinding	+2/0 mm
Tolerance feet location	+7/-7 mm
Tolerance holes location	+2/-2 mm
Tolerance holes diameter	+1/-1 mm

Drawn by	Created Date	Checked by
Rafal B	2018-06-12	Zbigniew P
Project status: Approved	Client: LEROY MERLIN	

Art. Name: REMIX 1 1000x800
Art. No: 6073421030xx
Mould No: FZ342103
Customer ID: 3127

Material volume[mm³]	Overflow	Taphole	Main dimensions L x W / H [mm]	Drain
20046431	No	0	1000 x 800 / 34	Cover
Surface area[mm²]	Sheet Size	Scale		Current revision
1677783	A3	1:10		002

MARmite

This document must not be copied without our written permission, and the contents thereof must not be imparted to a third party nor be used for any unauthorized purpose. Contravention will be prosecuted.