Rev	Design Change Note	Author	Date
A	Internal validation	RB	2018-06-12
001	First issue - proposal	RB	2018-06-15
002	Approved by client	RB	2018-06-25

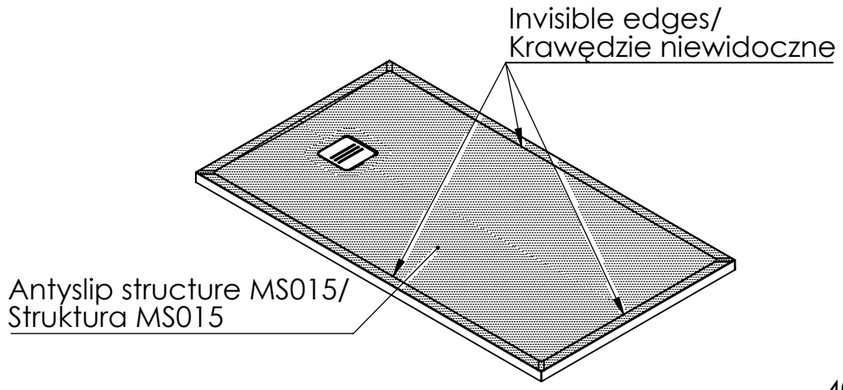

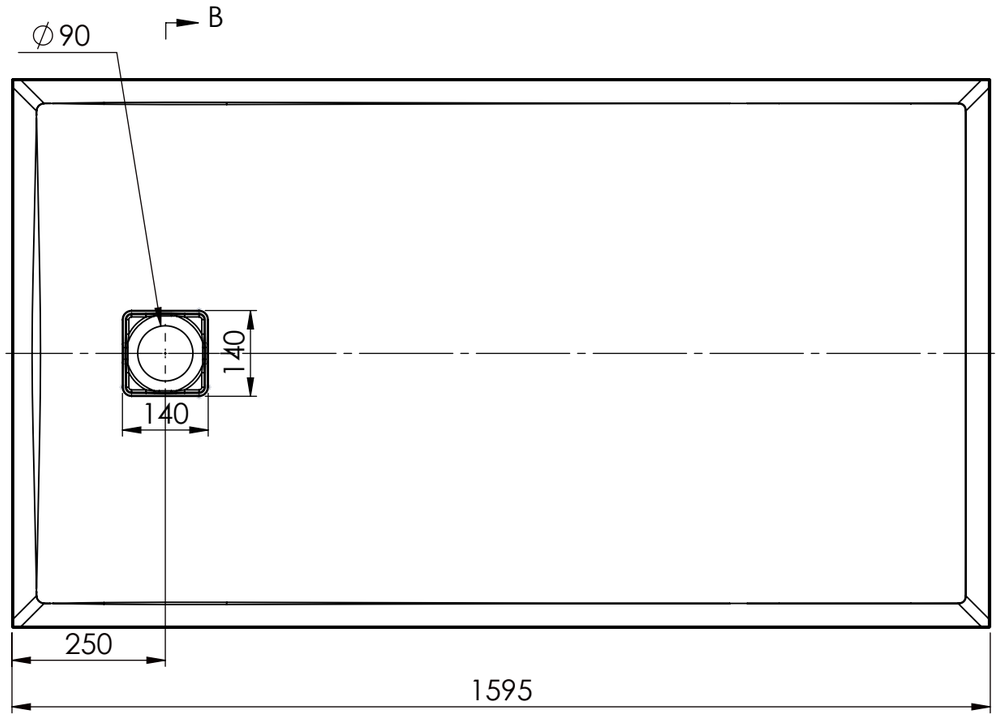

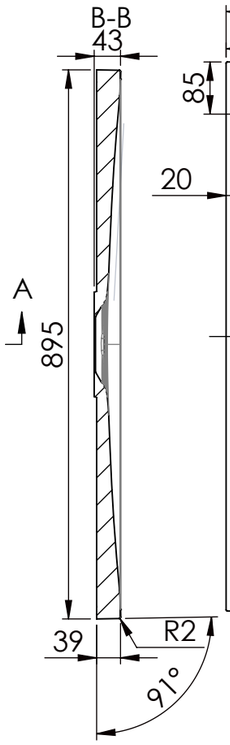

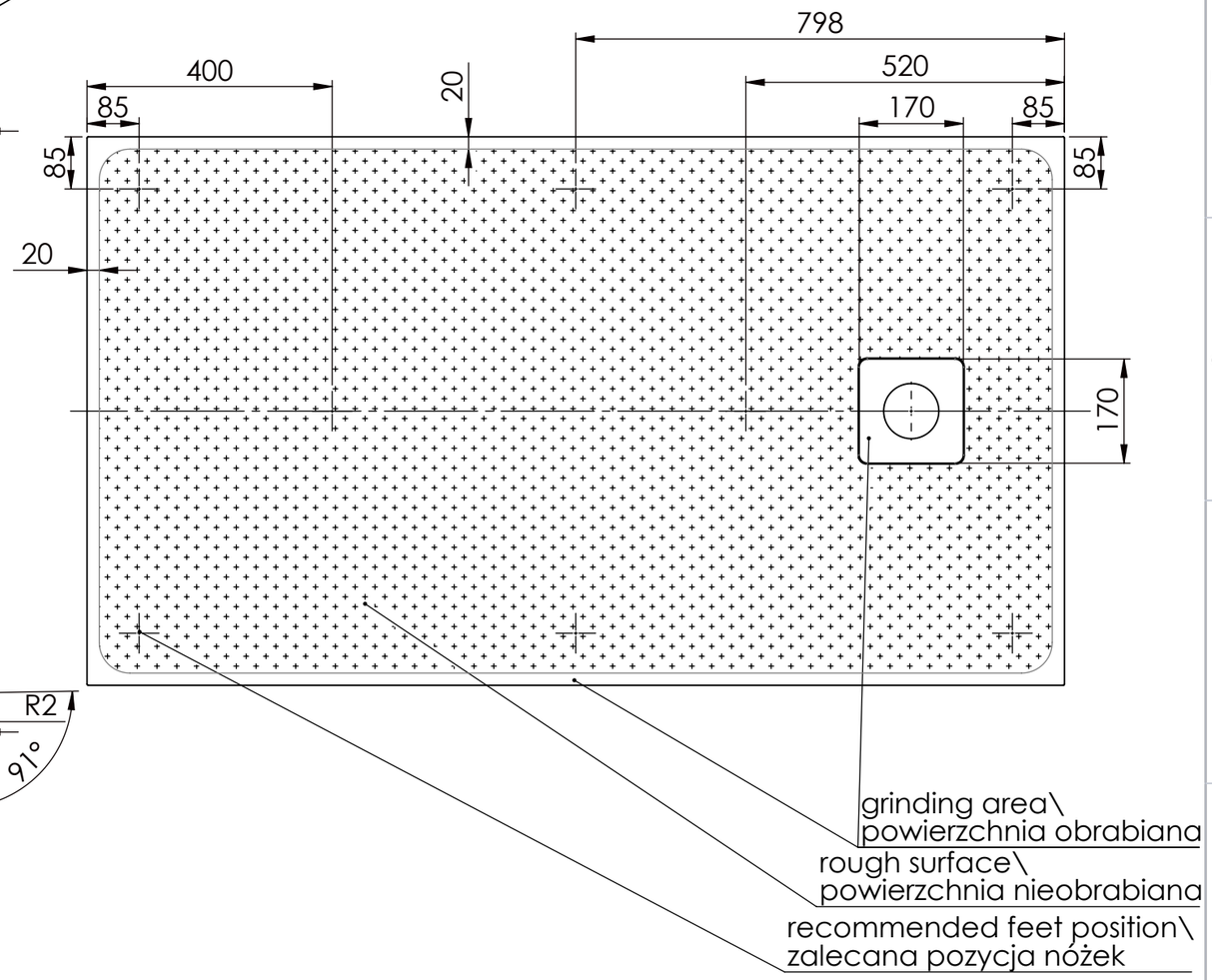

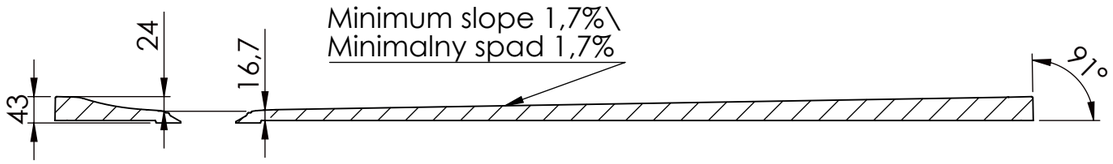

Notes/Uwagi:

1. Steel plate - see drawing 103300000055/Metalowa przykrywka - patrz rysunek 103300000055

Tolerance length/width		+5/0 mm	Drawn by: Rafal B	Created Date: 2018-06-12	Checked by: Zbigniew P
Tolerance height		+2/-2 mm	Project status: Approved	Client: LEROY MERLIN	
Tolerance plane bending	<1200 mm	+2/-2 mm			
	≥1200 mm	+3/-3 mm			
Tolerance thickness		+2/-2 mm			
Tolerance grinding		+2/0 mm			
Tolerance feet location		+7/-7 mm			
Tolerance holes location		+2/-2 mm			
Tolerance holes diameter		+1/-1 mm			

Art. Name: REMIX 1 1600x900
Art. No: 6073431630xx
Mould No: FZ343163
Customer ID: 3127

Material volume[mm³]	Overflow	Taphole	Main dimensions L x W / H [mm]	Drain
45007933	No	0	1600 x 900 / 43	Cover
Surface area[mm²]	Sheet Size	Scale		Current revision
3035274	A3	1:10		002

MARmite

This document must not be copied without our written permission, and the contents thereof must not be imparted to a third party nor be used for any unauthorized purpose. Contravention will be prosecuted.